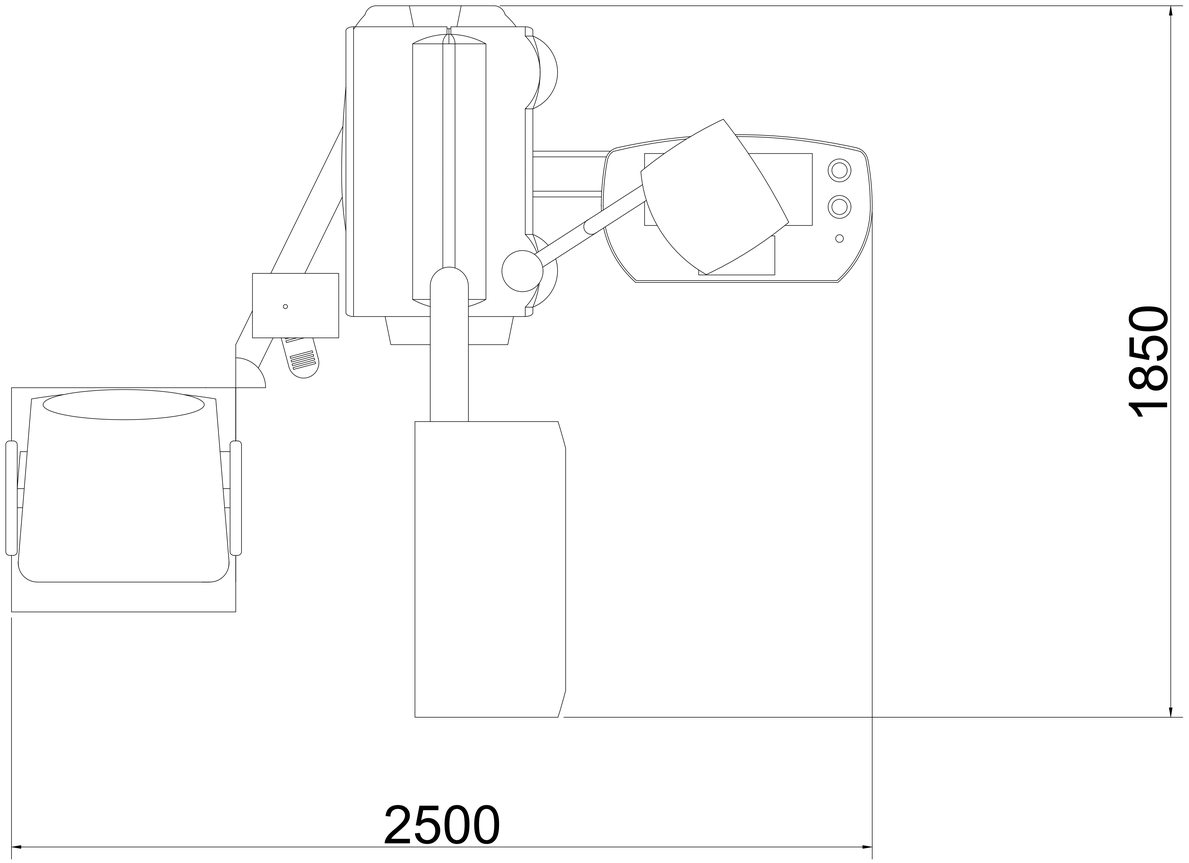
1850
2500

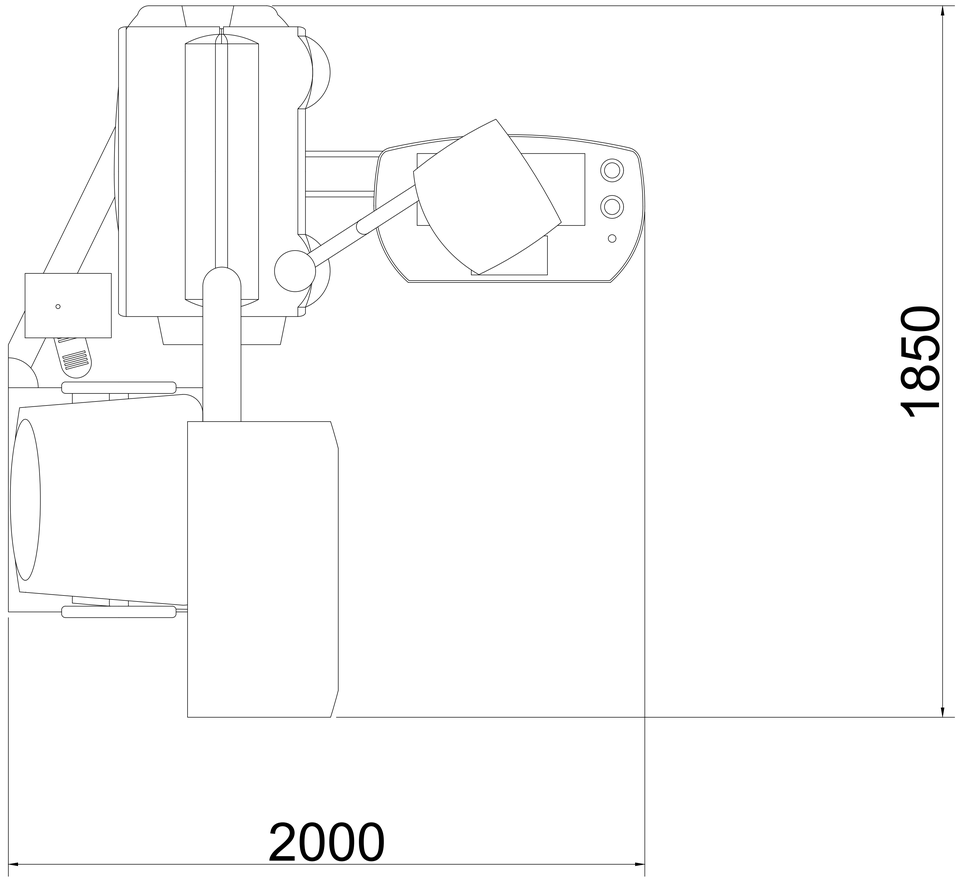
1850
2000